TRASH BOT

Designed by: Team Placeholder

HUMBOLDT STATE UNIVERSITY
Spring 2021

Benjamin George, Joseph Hollingsworth, Drake Pitchford
Engineering 215: Introduction to Design

Table of Contents

Table of Contents

Table of Figures

1 Problem Formulation

1.1 Introduction

Section 1 which is comprised of sections 1.1-1.4, introduces background information, our objective statement for our design project, and a black box model that shows the overall purpose of our project. Team Placeholder consists of Benjamin George, Drake Pitchford, and Joseph Hollingsworth from Humboldt State University's Engineering 215 class, 2021 Spring semester. This project is for Catherine L. Zane Middle School in Eureka California.

1.2 Background

The world has been in a global pandemic since 2020, and Zane middle school in Eureka California needs to be open. Due to the pandemic, the school has had an increased need for sanitization. Trevor Hammons, the school counselor, has contacted us and presented an opportunity to design, and build a solution: portable hand sanitizer dispensers. These dispensers will be moved around the school daily outside and need to supply over 100 students each with hand sanitizer daily.

1.3 Objective

The objective of this project is to develop multiple portable, safe, easy to operate, and easy to maintain, hand sanitizer dispensers suitable for middle school students and staff that will be placed around campus. The design will ensure the students of Zane middle school have an easy, effective, and safe way to keep their hands virus free.

1.4 Black Box Model

A black box model is a visual representation of the project, where the input is the state of the world before our solution, and the output is the state of the world after our solution. The black box represents the entire design process.

Figure 1-1 Black Box model of before and after our solution to the hand sanitizer problem at Zane Middle School

2 Problem Analysis and Literature Review

2.1 Introduction to Problem Analysis

The purpose of problem analysis is to cover the specific criteria and preferences of the customer regarding the design process for portable hand sanitizer stations for Zane Middle School. This section will cover qualitative and quantitative specifications and criteria.

2.1.1 Specifications

The design must meet the following specifications for it to meet the needs of Zane Middle School.

- Portable, as to be able to be transported around the school several times a day.
- Meet the Zane Middle School COVID-19 guidelines.
- Be safe for students and staff.
- Simplicity in maintenance and operation.
- Usable by middle school students.

2.1.2 Considerations

The special considerations for this project are that it needs to be durable, as to withstand hundreds of uses a day, as well as be able to withstand the Eureka climate. The dispensers should be easily operated by middle school aged children, as well as staff.

2.1.3 Criteria

The criteria are the necessary qualities that the project must incorporate into its design as requested by our client, Mr. Hammons, the criteria as well as their respective constraints for the project are listed below in, Table 2-1 Table of criteria developed.

Criteria	Constraints
Safety	Must comply With Covid-19 safety protocols, as well as be safe to operate and maintain
Portability	Must be able to be moved around the school multiple times a day by a single middle school student
Durability	Must be able to withstand hundreds of uses a day, as well as the Eureka weather, as well as not easily broken apart by middle school students
Ease of Use	Must be simple and quick to operate
Ease of Maintenance	Must be easy to refill as well as have easily replaceable, available components
Cost	The cost of the entire project must not exceed $325
Aesthetics	Must look appropriate for a middle school environment, and Zane middle school

Table 2-1 Table of criteria developed.

2.1.4 Usage

The hand sanitizer stations will be used to dispense hand sanitizer to students and faculty at Zane Middle school. The stations will remain at Zane and be in use for the foreseeable future.

2.1.5 Production Volume

At least two units will be produced.

2.2 Introduction to Literature Review

The purpose of the literature review is to give insight into the factors that shaped our design process. The main components researched were, hand sanitizer, construction materials, client criteria, and the middle school environment.

2.2.1 Client Interview

Our client, Mr. Hammons, was interviewed, and asked to provide necessary information for our design process.

2.2.1.1 Usage

The hand sanitizer stations will primarily be used as mobile hand sanitizer access points during the morning and lunch time when students walk around the school (Hammons 2021).

2.2.1.2 Resupply

The preferred mode of replacing hand sanitizer is to replace individual bottles, as opposed to filling a tank of some kind. If the stations are designed with a specific brand or bottle size of hand sanitizer in mind, the school will shift purchases toward the specific brand or bottle size. Most often staff will replace the bottles, however students may as well, so it is important that it is a simple and accessible process (Hammons 2021).

2.2.1.3 Location

The stations will be placed at high traffic points, such as the cafeteria, and where the students board and un-board the busses. Most of the time these high traffic points will be outside. Students may or may not be required to form queues around these stations, so quick easy dispensing is needed. As these stations will need to be mobile, wheels would be preferred (Hammons 2021).

2.2.1.4 Dual Pumps

A dual pump system would allow for double the number of students to use the station at one time, provided COIVD-19 regulations can be met (Hammons 2021). A dual pump system would have to consist of two independent points of dispensation, separated by a physical barrier, or a large enough distance to avoid contamination.

2.2.2 Hand Sanitizer

Hand sanitizers, or hand rubs, are agents that are applied to hands with the purpose of removing pathogens (Rogers 2020). This section will go over the various brands and types of hand sanitizer, and associated criteria/effectiveness for a pandemic middle school environment.

2.2.2.1 Brands of hand sanitizer

What brand of hand sanitizer is important to consider given the brand chosen needs to be widely available for purchase. The three top manufactures of consumer hand sanitizer other than private labels: are Purell® Advanced, Germ-X®, and Wet Ones® (Thomasnet 2020).

2.2.2.2 Active Ingredient

The active ingredient in hand sanitizer is what is responsible for killing pathogens. All three of the most popular brands (Purell® Advanced, Germ-X®, and Wet Ones®), all use ethyl alcohol as their active ingredient. Their respective concentrations are, 70%, 62%, and 69% (Gojo, Germ-X, Wetones 2021).

2.2.2.2.1 Active Ingredient effectiveness

For a hand sanitizer to be effective against COVID-19, it needs to contain at least 60% ethyl alcohol/ethanol (FDA 2021). All three brands meet this requirement. The optimal concentration of alcohol in an antiseptic is 60-80%, with higher concentrations often being less effective since they evaporate too quickly, not leaving enough contact time for the alcohol to kill pathogens. The lower concentration range is considered 60-65% (McDonnell Sheard 2012).

2.2.2.3 Brand Packaging/dispensing

Purell® Advanced, and Germ-X® both offer bottles with built in pump mechanism, as well as flip cap bottles, however, Wetones only offers flip cap bottles (Amazon 2021). Purell® offers sizes ranging from 1oz-1-liter bottles (Gojo 2021). Germ-X® offers bottles from 1.25-67.6oz (Germ-X 2021). While Wetones offers bottles from 2-16oz (Wetones 2021).

2.2.3 Trigger Mechanisms

The trigger must be a hand free mechanism. Some options are as follows: a pedal system or a mechanical system involving a motion sensor.

2.2.3.1 Motion sensor trigger

A motion sensor trigger would allow for a quick hands-free dispensing method. In order to use a motion sensor, trigger multiple components will be needed: an Arduino, servo, a PIR sensor, and

Figure 2-1 Shows how an Arduino circuit for dispensing diagram might look with a servo motor on the left, Arduino in the middle, and a PIR sensor on the right.

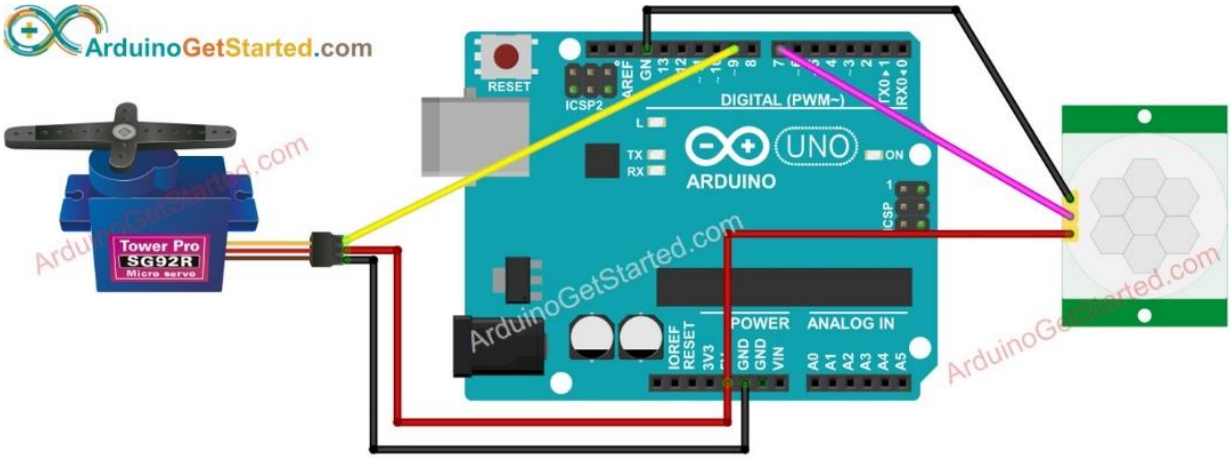

Figure 2-1 Example Wiring Diagram for a PIR sensor/servo Arduino (Arduino 2021).

2.2.3.1.1 Arduino

Arduino is an open-source electronic platform based on easy hardware and software, as well as Arduino boards. An Arduino board is a circuit board able to read inputs, and based on the input, release an output (Arduino 2021).

2.2.3.1.2 Servo

A servo motor is a motor that allows for precise control in position, acceleration, and velocity (Goel 2016). In the context of this project a servo would be used to push down the pump for the hand sanitizer when told to do so by the Arduino an PIR sensor.

2.2.3.1.3 PIR Sensor

A PIR sensor is a motion sensor that uses passive infrared radiation to detect motion by looking for a change in infrared radiation using two lenses (Li 2019).

Figure 2-2 shows how a PIR sensor detects motion.

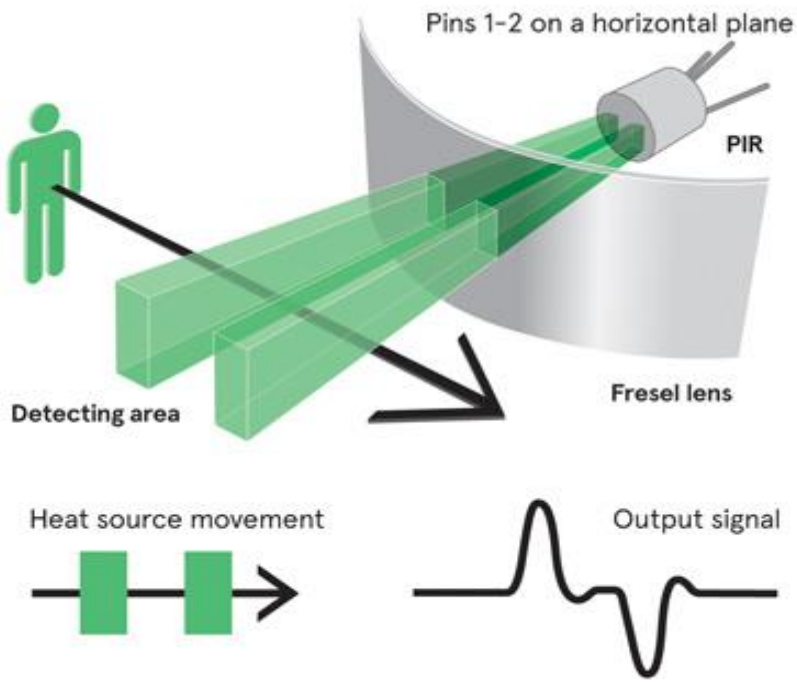

Figure 2-2 A typical PIR sensor in operation (Keenan 2018)

2.2.3.2 Pedal Triggers

A pedal trigger would allow students a hands-free way to dispense hand sanitizer without the need for electronics or batteries. Having several pedal operated hand sanitizer stations overall improves hand hygiene (Wichaidit et al. 2020).

2.2.3.2.1 Potential Pedal Trigger Designs

This section will cover two potential pedal mechanisms, direct dispensing, and indirect dispensing.

2.2.3.2.1.1 Direct dispensing

Direct dispensing is directly using the power of a pedal to dispense hand sanitizer.

Figure 2-3 is an example of a direct dispensing trigger mechanism; the foot pedal is directly linked to the pump of the sanitizer.

Figure 2-3 Direct dispensing trigger mechanism (Testrite n.d.)

2.2.3.2.1.2 Indirect Dispensing

Indirect dispensing is using another medium attached to the pedal and or the pump to dispense hand sanitizer. This method is more complex but allows for a more disjointed pedal and dispensing.

2.2.4 Zane Middle School

Zane Middle School will be where our hand sanitizer dispenser will be located. An understanding of the environment on campus will help us create dispenser that will better integrate to the campus (Zane Middle School 2021).

2.2.4.1 Weather

For most of the year the Eureka area is rainy and windy this requires any materials we use to be weatherproof. Due to the possibility of electronics being integrated into the dispensers, special care will be needed to weatherproof such systems. As well the summers can be dry, so we need some level of heat resistance (humboldtgov.org 2020).

2.2.4.1.1 Rain

Humboldt county can expect 40 to 100 inches of rain in a year. This is considered very high rain fall. The dispensers need to be able to withstand this amount of rainfall (humboldtgov n.d.).

2.2.4.1.2 Wind

Annual average wind speed is 12.9mph this is relatively high. The mass of the product needs to be taken into consideration as to have it not blow over (USA.com 2020).

2.2.4.2 Language

The Zane Middle School is multilingual, mostly consisting of English and Spanish language speakers. This requires and written instructions to be accessible to most of the campus (Hammons 2021).

2.2.4.2.1 Image Use

To avoid a language barrier, images are a viable option in place of written instructions. This would make the dispenser more accessible to people who do not understand English or Spanish very well.

Figure 2-4 is an example of non-heavily language biased instructions.

Figure 2-4 Example Image use for hand sanitizer instructions (smartsign 2021).

2.2.4.3 Student Usage

A standard hand sanitizer pump releases about 2.5mL of sanitizer per use. Expected usage will be between 200 and 300 uses per day per dispenser. The top expected use is 750mL per day and lowest expected is 500mL per day (Poison Control n.d.) (Hammons 2021).

2.2.4.4 Prevention of danger

One of the main priorities of the project is student safety. Injury accruing from the dispenser is unacceptable (Hammons 2021).

2.2.4.4.1 Slippage

Leaked hand sanitizer is a possible source of slippage for students (Hammons 2021).

2.2.4.4.2 Non-Hazardous Construction

Examples of hazardous construction that could hurt students consists of: Splinters, Nails, excessive mass/weight (Hammons 2021).

2.2.4.5 Potential Upcycle options

Upcycling is the use of discarded items in an attempt to use them for a different purpose (Habitat n.d.). The students and staff on campus have previously responded positively to upcycled projects in the past making this an option for further construction. Upcycled projects have educational and environmental benefits for the development of the students (Hammons 2021).

2.2.4.6 Social pushes

Since the beginning of COVID-19, the number of interactions with sanitation areas have increased. The use of sanitation areas increases when located close to one another (Liabsuetrakul et al. 2020).

2.2.4.7 Designing for a Student Environment

Prior classes in the Engineering 215 design course have been tasked with taking on similar problems at Zane Middle School. An example of this is the triangle of death. The triangle of death was an attempt to redesign an area of land on campus. This is an example of failure; in the following years, this project has been reattempted 3 times. It failed to consider the behavior of students (Figure 2-5) (Humboldt State Now 2015).

Figure 2-5 Shows a prior engineering project at Zane Middle School from 2015

Figure 2-5 Engineering 215 Introduction to design project (2015).

2.2.4.8 Vandalism

Vandalism is the intentional infliction of damage to property. Vandalism could discourage the use of the dispenser. It has been shown that the best form of prevention for vandalism is social expectation with a decrease of 78.5% (Mayer et al. 1983).

2.2.5 COVID-19 Regulations

Due to the current pandemic a large number of guidelines need to be followed to have students back on campus. With a large emphasis on safety of students and staff trying to avoid illness. (Zane Middle School 2021).

2.2.5.1 Density of People

A requirement of the school is to minimize downtime of people being in a small area for extended periods of time, therefor it is important that there is a quick dispensation method (Zane Middle School 2021).

2.2.5.2 Sanitation Requirements

Stations on campus are to be regularly disinfected after use or before or after use. Students and staff will need to be properly always wearing masks with no exceptions. The goal is to minimize contact and germ spread across students as well as staff to maintain safety (Zane Middle School 2021).

2.2.6 Materials

The final products will be constructed on a limited budget, with limited materials. The main three options for construction material are, plastics, wood, or metal. The main criteria for selecting the material are; weight, durability, cost, carbon footprint, and weather-resistance

Figure 2-6 and Figure 2-7 show the advantages of and disadvantages of materials being considered.

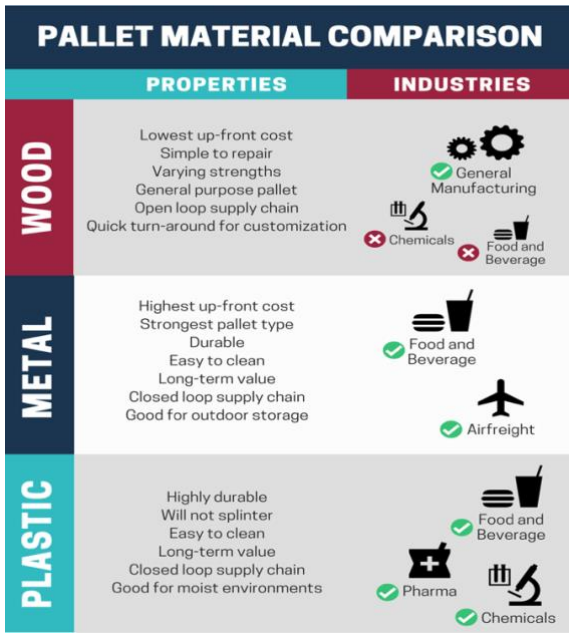

Figure 2-6 Comparison of Wood Metal and Plastic (Manufacturing.net 2017).

Figure 2-7Comparison between wood and recycled plastic (Park n Pool 2013).

2.2.6.1 Plastics

There are variety of different available plastics. Manufacturers use a variety of different plastic materials and compounds that each have unique properties. (A&C Plastics, Inc 2018).

2.2.6.1.1 PVC (Polyvinyl Chloride)

Polyvinyl Chloride (PVC or Vinyl) is a high strength material widely used in applications, such as pipes, medical devices, wire and cable insulation. Due to its versatility. It is lightweight, durable, and low cost, it is the world's third-most widely produced plastic. It is a white, brittle solid material available in powder form or granules. (*Omnexus* the material selection platform: 2011)

2.2.6.1.2 Plexiglass

Plexiglas is a strong alternative to glass. It is one of the most widely used plastic materials. Unlike glass though, it is shatter-proof, very flexible and even more transparent, However, Plexiglas also scratches more easily than many other products. Therefore, it’s not suitable for uses that involve mechanical friction. It can also attract dust and tends to yellow over time. Plexiglass is a potential option for a divider attached to the hand sanitizer dispenser that would stop airborne germs from crossing between the two sides of the dispenser. (Pixart Printing.co: 2013)

2.2.6.2 Wood

Wood is one of the few natural, renewable building materials. Wood is a greenhouse positive product with a lower net environmental impact than most other building materials. The process of manufacturing Wood uses substantially less fossil fuel energy per unit volume than plastic, steel, concrete, or aluminum (Hyne Timber 2019).

2.2.6.2.1 Waterproofing Wood

Treated lumber warranties assure the wood will not rot for up to a lifetime, even when in contact with the ground. Waterproofing sealer applications last up to two years depending on the use. Independent tests indicate both products are relatively safe if used properly. If wood was used in the final product it would have to be waterproofed in order to hold up in the climate of Zane Middle School (Hunker 2016).

2.2.6.2.2 Different Types of Wood

There are three types of wood that would be options for this product, Redwood, Pine, and Plywood boards. Pine is the cheapest type of standard wood that is readily available. Pine is a relatively hard wood and is most commonly used to build things around the world. Redwood is a softer wood which is very local to the area around Zane and could potentially be found for cheaper than pine in that region. Both Redwood and Pine would have to be heavily treated in order to be waterproof and withstand the weather of Zane middle school. Plywood is found extremely cheap and is already partially treated. Plywood is made from thin layers or "plies" of wood veneer that are glued together with adjacent layers; this makes it a much lighter material than the other woods. Plywood is likely the best option to build the final product out of for it's low cost and less treatment required (Wood Solutions 2019).

2.2.6.2.3 Weight of Wood

Weight would be a large concern when building out of wood.

2.2.7 PLYWOOD BOARD

1 1/8" Plywood	2.64 per square foot	84.5 lbs
3/4" Plywood (23/32)	1.9 per square foot	60.8 lbs
5/8" Plywood (19/62)	1.5 per square foot	48 lbs
7/16" Plywood (11.0mm)	1.46 per square foot	48 lbs

1/2” Plywood (15/32)	1.42 per square foot	40.6 lbs
3/8” Plywood (11/32)	1.12 per square foot	28.5 lbs
1/4” Plywood	1.45 per square foot	22.0 lbs

Table 2-2 Weights of plywood based on thickness (Skuld 2019).

2.2.7.1 Metals

Different metals have different properties, price points and availability. Metal has a relatively high cost compared to the other potential materials that can be used to build the product, however it is extremely durable and easy to clean. Metal also is much more difficult to manipulate.

2.2.7.1.1 Metal Availability

Because building custom metal pieces for the product is not an option due to budget and available resources, the best option for building with metal is to use available scrapped pieces of other objects, such as chairs and tables.

2.2.8 Adhesion Methods

There are many different available adhesion methods that could be used to build the final product. These methods includes; welding, glues, tapes and nails and screws.

2.2.8.1 Glues

Some glues are sticky plastics dissolved in water or another liquid, like elmers glue or other common white glues. As the plastics dry, the liquid evaporates and the solid, sticky adhesive stays behind. Other glues help things stick because of a chemical reaction. Krazy Glue and Gorilla Glue react with water vapor in the air and harden. Krazy Glue and Gorilla glue would be the optimal choice for a glue because they would not dissolve in water. (ACS 2014)

2.2.8.2 Tape

Most tapes are extremely affordable and easy to come by. Tape works in the same essentially as glue. Some tapes like scotch tape have weaker bonds that dissolve in water like white glue. Other tapes such as gorilla tape and flex tape have a different chemical reaction that allow them to attatch even when underwater. This makes a tape like flex tape optimal for the product because of the climate of Zane Middle School. (Echo Tape 2012)

2.2.8.3 Nails and Screws

Nails and screws are used to affix one object to another. Screws work by pushing and turning the metal bit so that the thread of the screw pulls into the wood or whatever material it is being used on. Compared to ordinary nails, screws provide more strength and holding power. Nails work in a different way. As the nail is driven into the wood, the wood fibers are bent down, and held down by the shank of the nail. There is friction between the fibers and the surface of the nail. If wood is the material of choice for the final product, then nails or screws would both be easily available options. If the final product is metal, then screws are still a good option to hold together the weight of the metal.

2.2.8.4 Welding

Welding is the process of melting a metal to join it with another material. There are three common types of welding which are gas welding, arc welding and laser welding. Arc welding uses an electrical arc to melt the metal. Gas welding uses a highly concentrated gas that is burned at the end of the welding stick which in turn melts the metal. Laser welding uses a high energy beam that points to a spot on the metal in order to melt and join two pieces. Laser welding is currently only used in large scale industrial welding processes and is unavailable for most projects. (summitcollege 2020)

3 Search for Alternative Solutions

3.1 Introduction

Many different solutions for the Hand Sanitizer Dispensers have been formulated as a result of brainstorming held between all members of Team Placeholder. All six of these formulated solutions meet the specifications and criteria set forth by our client.

3.2 Brainstorming

Team Placeholder met for a single brainstorming session where each member took turns coming up with ideas. Once the team settled on six different base ideas, the ideas were then developed as a team. The purpose of doing this was to ensure that each team member had the opportunity to contribute ideas for both big picture, and details. The notes taken can be found in Appendix 6.3.

3.3 Alternative Solutions

3.3.1 Trash Bot

The Trash bot hand sanitizer dispenser, as seen in Figure 3-1, is constructed with a plastic garbage bin serving as the shell/body of the unit. Many trash cans are designed for use outside, and the units will primarily be used outside, the garbage bin shell ensures outside durability. It uses a strong internal spring as well as two concentric PVC tubes inside with a foot pedal directly attached to the pumping mechanism to dispense hand sanitizer. This simple mechanism, as well as cheap and widely available parts ensures that maintenance will be easy. The hand sanitizer is held in place by Velcro straps as well as an adjustable base. These allow for quick and easy changing of bottles, as well as accommodation for differently sized bottles. An internal wooden plank keeps the top of the unit rigid, as well as acts as the base which many of the mechanisms are attached to. Inside the unit several bottles of hand sanitizer can be stored to serve as replacement bottles. A small set of caster wheels on the rear of the unit, as well as an integrated handlebar ensure that the unit will be portable as well as stable when not in motion. The exterior of the unit is decorated with instructions for using hand sanitizer, as well as Zane Middle School themed decorations.

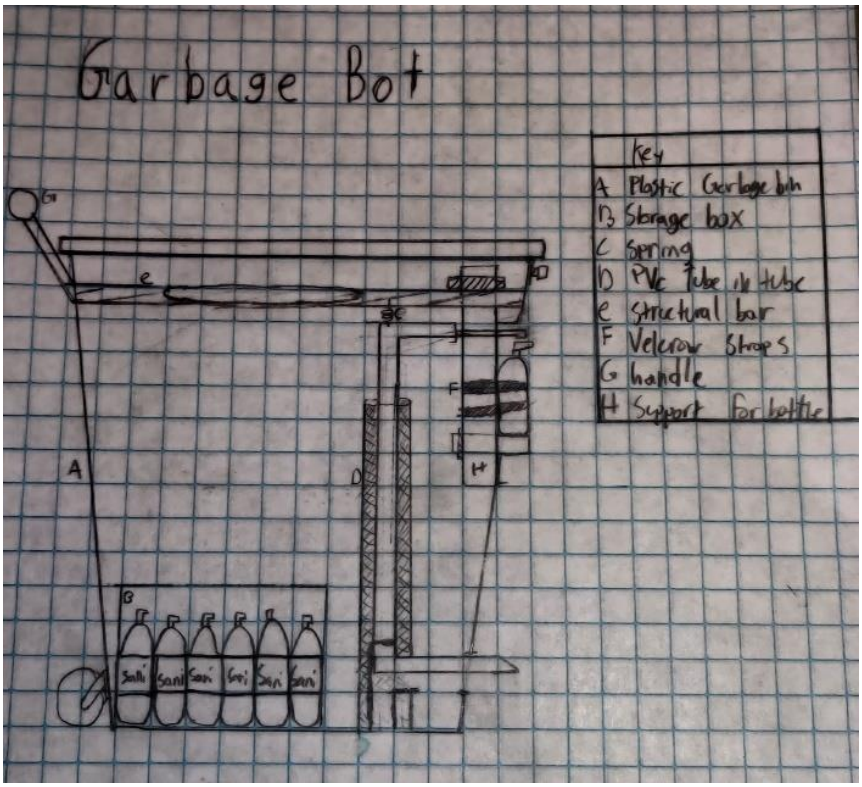

Figure 3-1 Initial Sketch of Trash Bot design (Drawing by Ben George).

3.3.2 String Theory

String theory is a hand sanitizer dispenser which primarily uses pulleys to dispense hand sanitizer. Figure 3-2 is a basic sketch of the model. String Theory consists primarily of a plastic box base, and a long 3-inch PVC pipe which supports the holding tray for the hand sanitizer. All exterior components, except the wheels, are made of durable plastics, designed to be able to withstand being uses outside for prolonged periods of time. The base of the unit is a plastic box with a lid on top of caster wheels. Inside this box, there is storage room for multiple bottles of replacement hand sanitizer, as well as the bottom of the pulley mechanism. The pedal mechanism uses a series of simple pulleys to create tension on the pump mechanism of the bottle. The simplicity of the mechanism makes sure that any repairs or maintenance would be easy. The long PVC tube neck houses the wire needed for the mechanism to work. The top tray which the hand sanitizer rests on, ensures that excess sanitizer will be collected, as well as supports the bottle. The wire plate on top of the pump mechanism of the hand sanitizer has an adjuster that lets you adjust the length of the strings in order to accommodate bigger or smaller bottles.

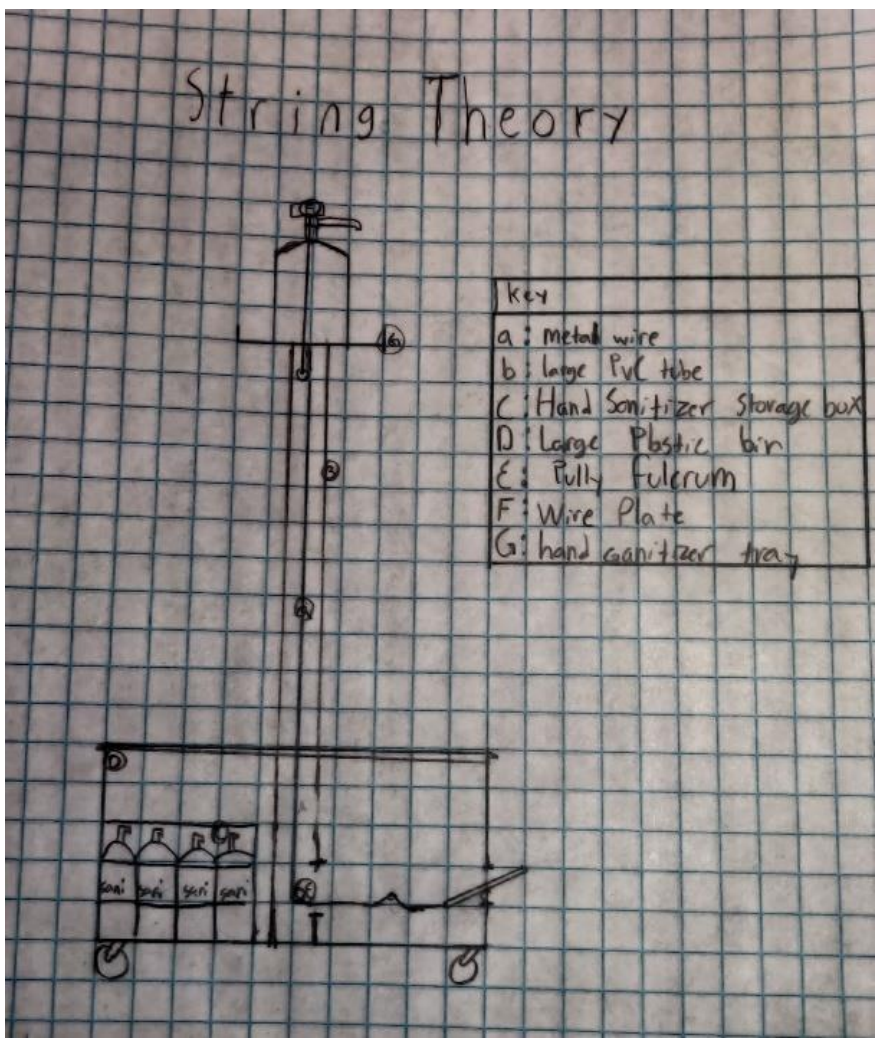

Figure 3-2 Initial Sketch of String Theory Design (Drawing by Ben George).

3.3.3 Bucket Bottom

Bucket bottom is a hand sanitizer dispenser that consists of a pulley system to distribute hand sanitizer using a foot pedal as a trigger. Figure 3-3 is a basic sketch of the model. At the base it uses a plastic storage container that is divided in half for storage and bottom weight. The wheels attached to the sides of the container allow for easy transportation. The item "K" acts as both a spot for the hand sanitizer to sit as well as a catch for any spillage. Item E and E_2 are a latch and lock for the storage to maintain safety. For a trigger mechanism it consists of a foot pedal that raises a weighted PVC pipe tube that will fall, pushing out hand sanitizer when released. With a basic trigger system, locks to provide easy storage, a system of bottom weight to resist the environment.

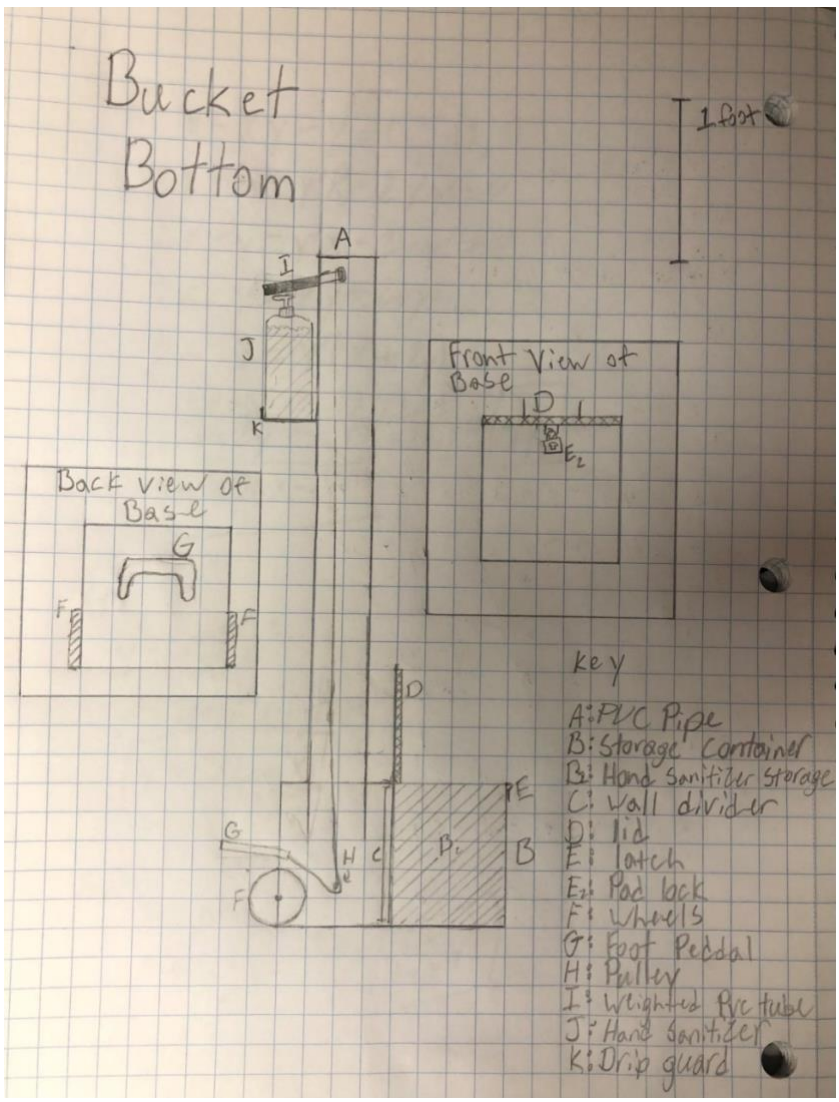

Figure 3-3 Initial Sketch of Bucket Bottom Design (Drawing by Drake Pitchford).

3.3.4 Up Push

Up Push is a hand sanitizer dispenser that acts in the container releasing from the bottom using a valve attached to a pulley system to release the valve. Within Figure 3-4, Figure “A” acts a storage compartment for a bottom weight and easy refiling. As well the container covering the pulley attached to the foot pedal will act as a drip catch for spillage. The foot pedal “C” pushes up on the valve allowing hand sanitizer to flow down into the persons hand below and uses the weight of the sanitizer in the bottle to reseal the valve. The item “B” is the base of a common office chair allowing easy mobility around the school.

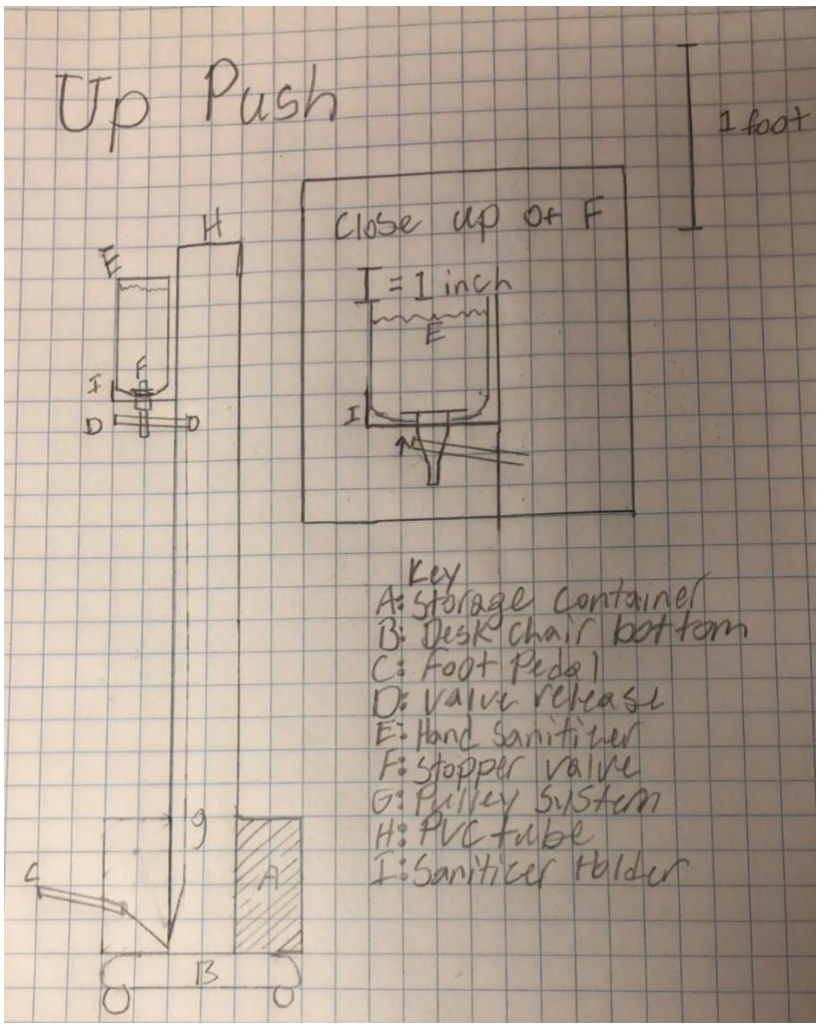

Figure 3-4 Initial Sketch of Up Push (Drawing by Drake Pitchford).

3.3.5 The Big Box

The Big Box is a large box made of wood which contains all of the mechanisms that the product includes. This design includes a foot pedal and a pulley to change the direction of motion that activates the hand sanitizer dispensing. This design also includes a clear plexiglass panel so that the pulley and hand sanitizer dispensing system is visible from the outside. The other half of the box is designated to storing extra hand sanitizer bottles so that when the bottle in use is out then it is very easy and convenient to replace. The product will have two larger wheels on the back so that the product functions like a dolly and can be pushed around the school with ease. The 3D view shows an isometric drawing which shows what the product from the outside. The section view is a side view from halfway inside the box. It displays in slightly more detail the way that the foot pedal will pull the rope and in turn pull a block that will push on the hand sanitizer pump.

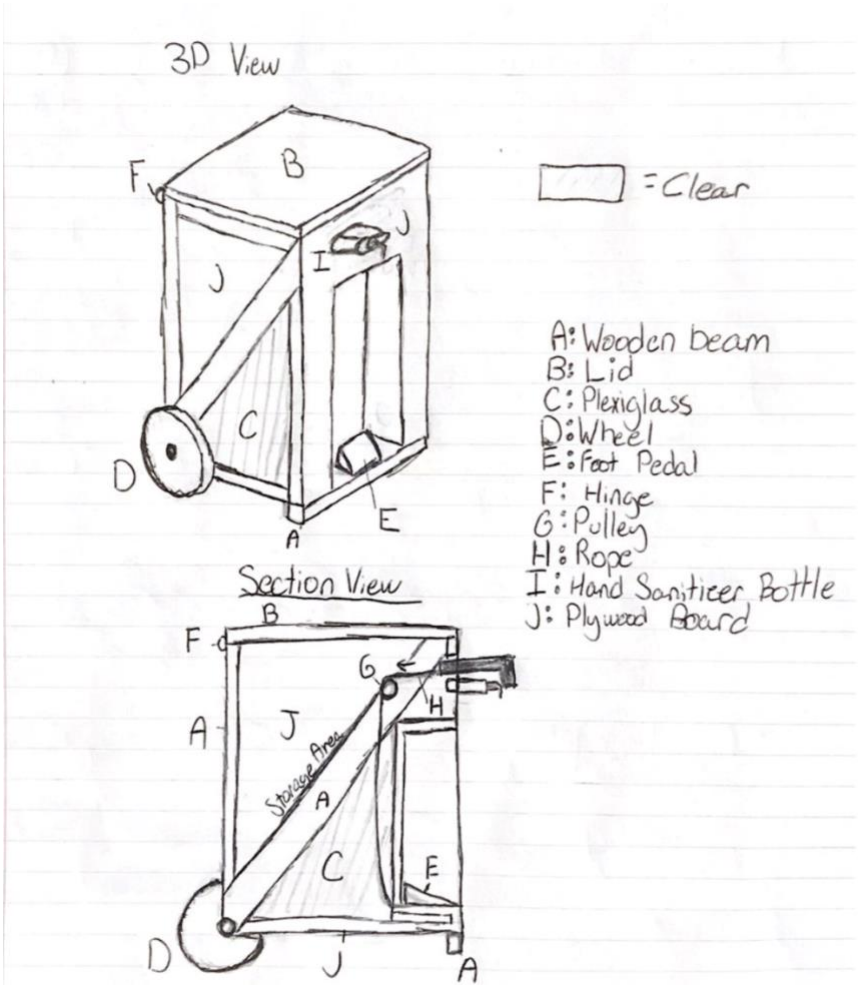

Figure 3-5 Initial Sketch of Big Box (Drawing by Joseph Hollingsworth).

3.3.6 Double Pump

The double pump consists of a platform with caster wheels, a large plastic bucket, a metal pole, and a small platform with two hand sanitizer bottles on it. This is a simple design that does not include any sort of extra mechanism other than the pump in the bottle itself. The four wheels on the bottom platform makes the product easy to move and leave somewhere open where students can go on either side of it. Having two bottles being used at once allows twice the students to use the product at the same time. The plastic bucket "B" works as a storage system that keeps hand sanitizer bottles inside and benefits the product by keeping it bottom heavy as to not tip over.

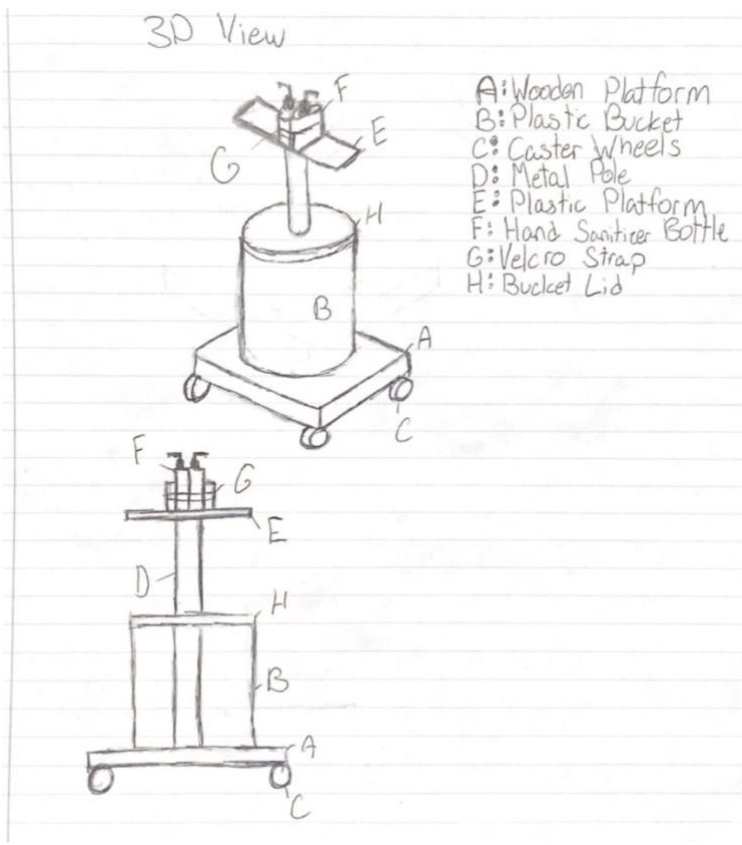

Figure 3-6 Initial Sketch of Double Pump (Drawing by Joseph Hollingsworth).

4 Decision Phase

4.1 Introduction

The purpose of this section is to analyze the potential solutions given in Section 3 and the criteria presented in Section 2 in order to choose the optimal final designs. This process was completed using ranked choice voting, with client input.

4.2 Criteria Definition

The criteria below are the main elements to consider when designing the project.

- **Safety:** The ability of the project to follow Zane middle school regulations, as well as not be hazardous.
- **Portability:** The ability of the project to be transported.
- **Durability:** The ability of the project to withstand repeated usage and abuse.
- **Ease of use:** The ability of the project to be operated easily.
- **Ease of maintenance:** The ability of the project to be maintained cheaply and easily.
- **Cost:** The ability of the final project to be within the cost limit set in Section 2.
- **Aesthetics:** The ability of the project to pleasing to look at.

4.3 Decision Process

Ranked choice voting is a system where each voter can rank candidates by preference, ensuring that the candidate(s) chosen is the most preferred overall. The votes were based off of what solution each group member thought met the client criteria the best, as well as each members' personal preference. Table 4-1 shows the results of our ranked choice voting.

Solutions		Ben	Joey	Drake	votes
Garbage bot		3	3	1	7
String Theory					0
Bucket bottom		1	2	3	6
Up-Push					0
Double Pump					0
Big Box		2	1	2	5

Table 4-1 Ranked Choice Voting table

4.4 Final Decision Justification

The final design that we decided on was the trash bot. Trash bot's plastic outer shell, large internal storage, large refillable sanitizer reservoir, and it's durability, all help it to meet the criteria best in comparison to the other solutions. We believe that trash bot will be most useful to Zane middle school and be the most cost effective out of all our designs especially after talking

with the client and discussing the implementation of the trash bots in PE classes and storing sports equipment. The Trash bot would be highly durable, and versatile while remaining cost effective and meeting the requirements of safety.

5 Specification of Solution

5.1 Introduction

Section 5 is an analysis of the final designs for the portable hand sanitizer dispensers. This section includes complete descriptions of the solutions, a detailed account of the total costs, both in terms of time, and money, implementation instructions, projected maintenance costs, and the results of testing.

5.2 Solution Descriptions

The Trash Bots are hand sanitizer dispensers comprised of wheeled garbage bins for the main body, and a mounted exterior PVC pedal mechanism, to dispense hand sanitizer. The garbage bin body is hollow, to allow for the storage of P.E. equipment, with a mounted holster for sanitizing wipes to clean off the equipment.

5.2.1 Trash Bot 1

Trash Bot 1 is a hand sanitizer dispenser comprised of a wheeled garbage bin for the main body, and a mounted exterior spring-powered PVC pedal mechanism, to dispense hand sanitizer out of a refillable 1-liter reservoir. The garbage bin body is hollow, to allow for the storage of P.E. equipment, with a mounted holster for sanitizing wipes to clean off the equipment.

5.2.1.1 Body

The main body of Trash Bot is composed of an outdoor wheeled trash can. The trash can has a built in handle, and removable lid. The trash can is 42 inches tall, 21 inches wide, and 17 inches long. All components attached to the can, are directly attached using 1 x ¼ inch hex bolts, with a nut to fasten, and a washer to distribute the weight of the components, as well as to protect the can from damage during installation. The interior volume of the can is approximately 45 gallons.

5.2.1.2 Trigger Mechanism

The trigger mechanism is mounted on the front of the body, touching the ground, 8 inches from the left, and 12 inches from the right, and, as seen in Figure 5-1, is primarily composed of; a 31 inch long 1 inch PVC tube, inside of a 35 inch long 1-1/4-inch PVC tube. The 1-inch PVC tube sits on top of a 1 x 3-1/2-inch compression spring, which powers the trigger by applying pressure upwards on the inner tube. The inner tube is attached to a 5-inch L bracket, via 3, ¼ inch by ¾

inch screws, through a bored-out slit in the outer tube with 3, ¼ inch nuts as spacers. The slit is ½ inches wide, and 5 ½ inches long, and the L bracket acts as the foot pedal. The slit runs 2 inches more than the length of the screws on the L bracket, as to give way for compression downwards. When being compressed, the nuts act as a stop by coming into contact with the bottom of the slit, stopping downward motion of the pedal, and of the trigger. Hand sanitizer is dispensed by having an elbow connector on top of the 1-inch pipe, which is connected to a 1-inch PVC tube that presses down on the hand sanitizer reservoir lever, which dispenses it. The trigger mechanism is attached with Velcro and an interlocking piece of 1 inch PVC pipe. foot pedal sits 7 inches off the ground, with 2 inches of allotted downward movement.

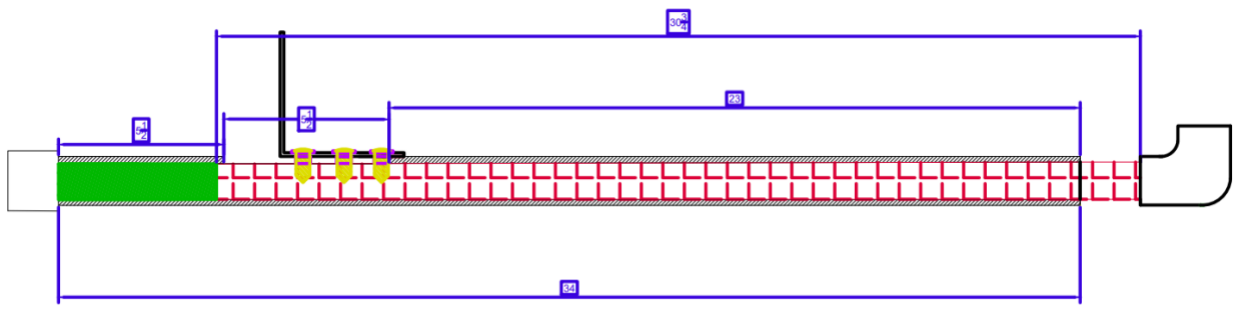

Figure 5-1 AutoCAD drawing by Benjamin George.

5.2.1.3 Hand Sanitizer Mount

The hand sanitizer is stored in a 1 liter, pump operated, refillable container, which sits in an off the shelf holder. The holder is attached to the trash can with 2, 1/8 inch by ½ inch screws, the holder comes with a lever that when pushed down, pushes on the pump of the container, dispensing the hand sanitizer, while also providing excellent leverage. The end of the lever is attached to the end of a 1-inch PVC elbow, which is attached to the PVC attached to the pedal. The lever needs to be pressed down 2 inches in order to dispense all the hand sanitizer, which is how far the pedal goes down as well. Figure 5-2 is a photograph of the mount attached to the trash can, and the trigger.

Figure 5-2 Photograph of the Hand Sanitizer Mount by Benjamin George

5.2.1.4 Sanitizing Wipe Container Holster

Inside the trash can, there is a mount for a standard Cylindrical sanitizing wipe container. The mount consists of a 5-inch L attached to the can with 3, 3/8-inch bolts, with a 16-inch Velcro strap to fasten the wipes.

5.2.2 Trash Bot 2

Trash Bot 2 is made up of 3 different components: the wheeled 45-gallon trash can, the exterior mounted PVC pipe trigger mechanism and an exterior mounted Hand Sanitizer Holster.

5.2.2.1 Body

The main body of Trash Bot is composed of an outdoor wheeled trash can. The trash can has a built in handle, and removable lid. The trash can is 32 inches tall, 17 inches wide, and 18 inches long. All components attached to the can, are directly attached using 0.1-inch hex bolts, with a nut to fasten, and a washer to distribute the weight of the components, as well as to protect the can from damage during installation. The interior volume of the can is approximately 45 gallons.

5.2.2.2 Trigger Mechanism

The trigger mechanism for Trash Bot 2 is made up of two concentric PVC pipes mounted to the outside of the trash can and one 3.5 inch “L” shape bracket acting as the foot pedal, which is

mounted to the smaller PVC pipes. The mechanism is built by mounting the larger 1-inch PVC pipe to the front side of the trash can (The side opposite the wheels) using 3 1-inch metal PVC pipe straps which are connected to the trash can using 1.25-inch screws and hex bolts. The mechanism is activated by applying a light downward force to the pedal with your foot and holding your hands under the hand sanitizer bottle and using said hand sanitizer. When doing this the 1/2 PVC pipe presses against the bottle of hand sanitizer pipe while the 1-inch PVC pipe remains stationary.

Figure 5-3 is an AutoCAD drawing of the front and side view of the pedal mechanism.

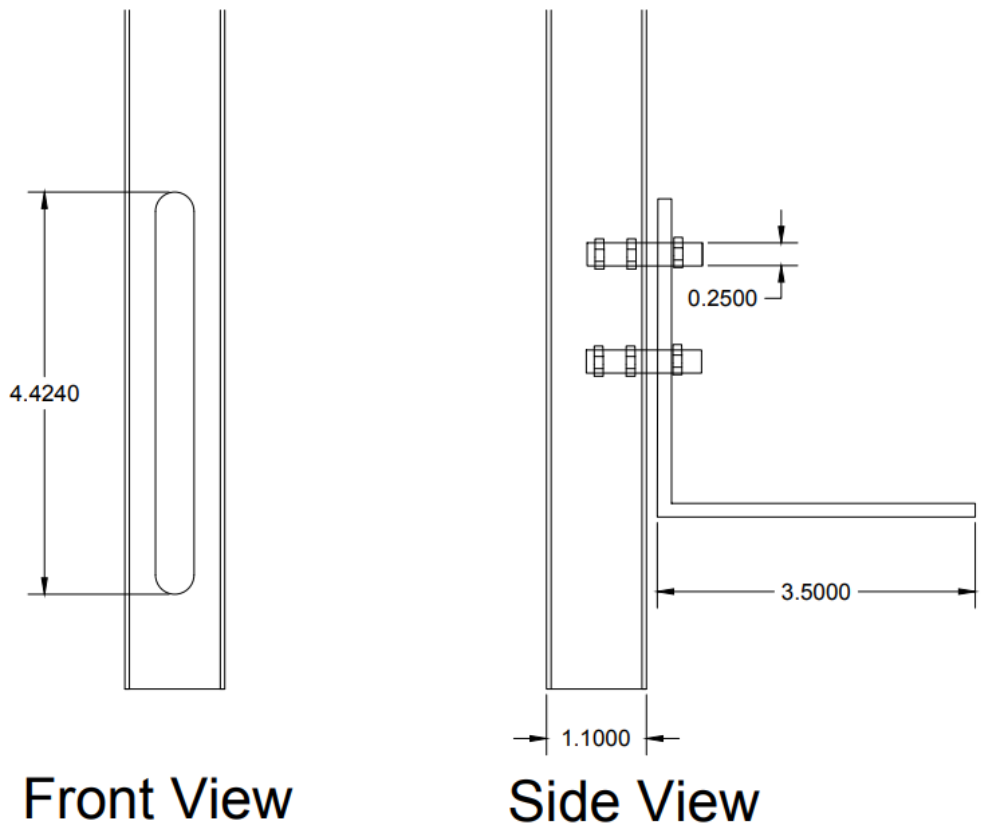

Figure 5-3 AutoCAD drawing of foot pedal by Joseph Hollingsworth.

5.2.2.3 Hand Sanitizer Mount

The hand sanitizer mount consists of simply one 5-inch diameter PVC end Cap and two 1-inch screws and two 0.1-inch hex bolts attaching said dish approximately 3 inches below the top rim of the trash can. This mount holds the hand sanitizer bottle near the top of the trash can and can fit many different medium size hand sanitizer bottles. When the hand sanitizer bottle is empty then one must remove the current bottle in use and replace it with another one.

5.3 Cost Analysis

This section provides an analysis of the costs of the project. The types of costs covered in this section are, the cost of design in terms of man-hours, construction cost, and the projected cost of maintenance.

5.3.1 Design Cost

Figure 5-4 is a pie chart of the total number of hours spent working on the design paper, and the projects themselves. The hours are broken down in terms of each phase of the projects design lifecycle.

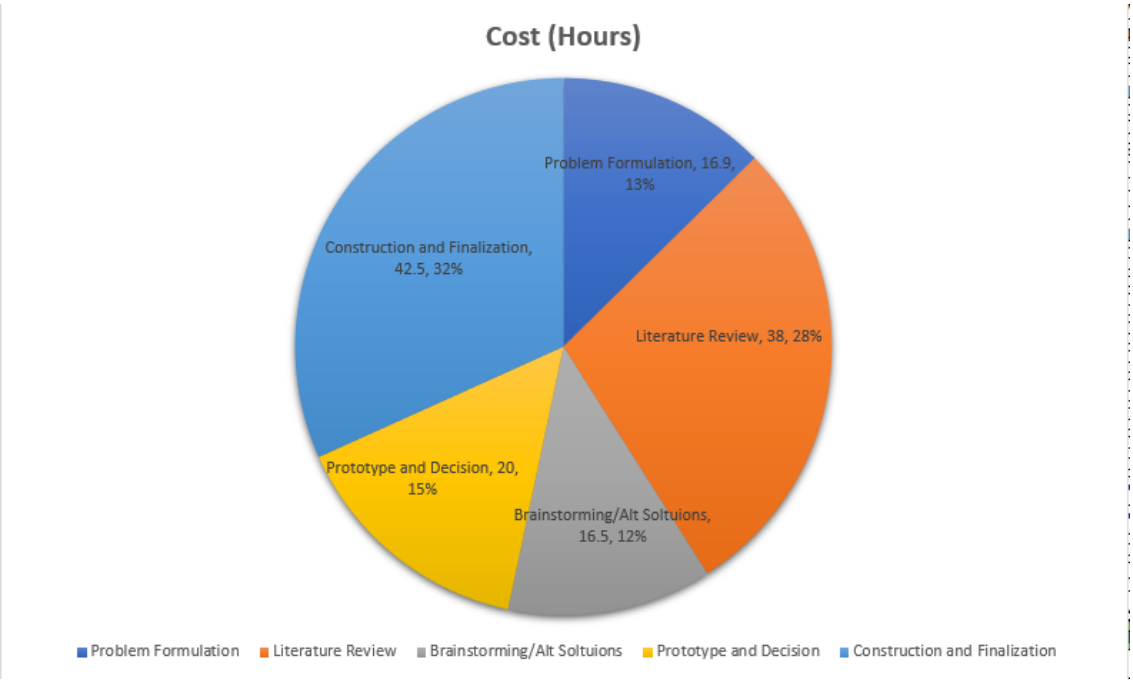

Figure 5-4 Pie chart of total time spent designing the project, broken up into the stages of design.

5.3.2 Construction Costs

Table 5-1and Table 5-2 are price breakdowns of all components purchased for prototyping, and construction of both units. The total cost of materials was $144.99.

TRASH BOT 1	
Material	**Total($)**
45 Gallon Trash Can	35.87
Flat Washer 7/16 50pk	2.56
1-1/4" Pipe Strap 4pk	1.57
Fender Washer 5/16 3pc	3.54
Sheet Screw 1-1/2	1.18
Hex Nut 1/4 15pc	1.20
Hex Bolt 1/4 x 1 9pc	1.35
1" PVC L Joint 2pc	2.40
Corner Brace	4.06
PVC Bushing 1-1/2"x1"	1.51
PVC Endcap 1-1/4"	1.01
PVC Cement	5.40
PVC Pipe 1-1/4"x10'	7.23
PVC Pipe 1"x10'	5.28
PVC Pipe 3/4"x10'	3.56
Corner Brace	4.79
"HARDWARE MISC" 3pc	1.17
"HARDWARE MISC" 4pc	0.56
Compression Springs 2pc	Donated
Hand Sanitizer Resevoir	Donated
Velcrow Strips	Donated
Total	**84.24**

Table 5-1 Price Breakdown for Trash bot 1

TRASH BOT 2	
Material	Total Cost
45 Gallon Trash Can	22.81
PVC 1" Elbow Joint 1 pc	1.37
PVC 1"	6.99
PVC 1/2"	5.99
PVC Cement	5.99
"HARDWARE" 8pc	2.18
"HARDWARE" 6pc	3.47
"HARDWARE" 6pc	3.40
1" Pipe STRAP 3pc	2.17
"HARDWARE" 2pc	0.67
Hand Sanitizer 8oz	4.59
PVC 1" Tee Joint 1pc	1.12
Total	**60.75**

Table 5-2 Price Breakdown for Trash bot 2

5.3.3 Maintenance Costs

The components that would need replacing would be, the compression springs of both units, sanitizing wipes for trash bot, and hand sanitizer for both units. Not accounting for refills of sanitizing wipes, or hand sanitizer, yearly maintenance would cost about $15.

5.4 Implementation Instructions

This section contains implementation and usage instructions for both units.

5.4.1 Trash Bot

To implement Trash bot, fill the hand sanitizer reservoir, then attach the horizontal trigger arm to the lever, open the lid insert a sanitizing wipe container into its holster, and move to a desired location. To use Trash bot, press down gently on the pedal while holding your hands below the spout on the hand sanitizer reservoir. To store and clean equipment, open the lid, and take a wipe from the holster, wipe down the equipment, place it in the hollow body, then close the lid. See Figure 5-5 for a step-by-step diagram.

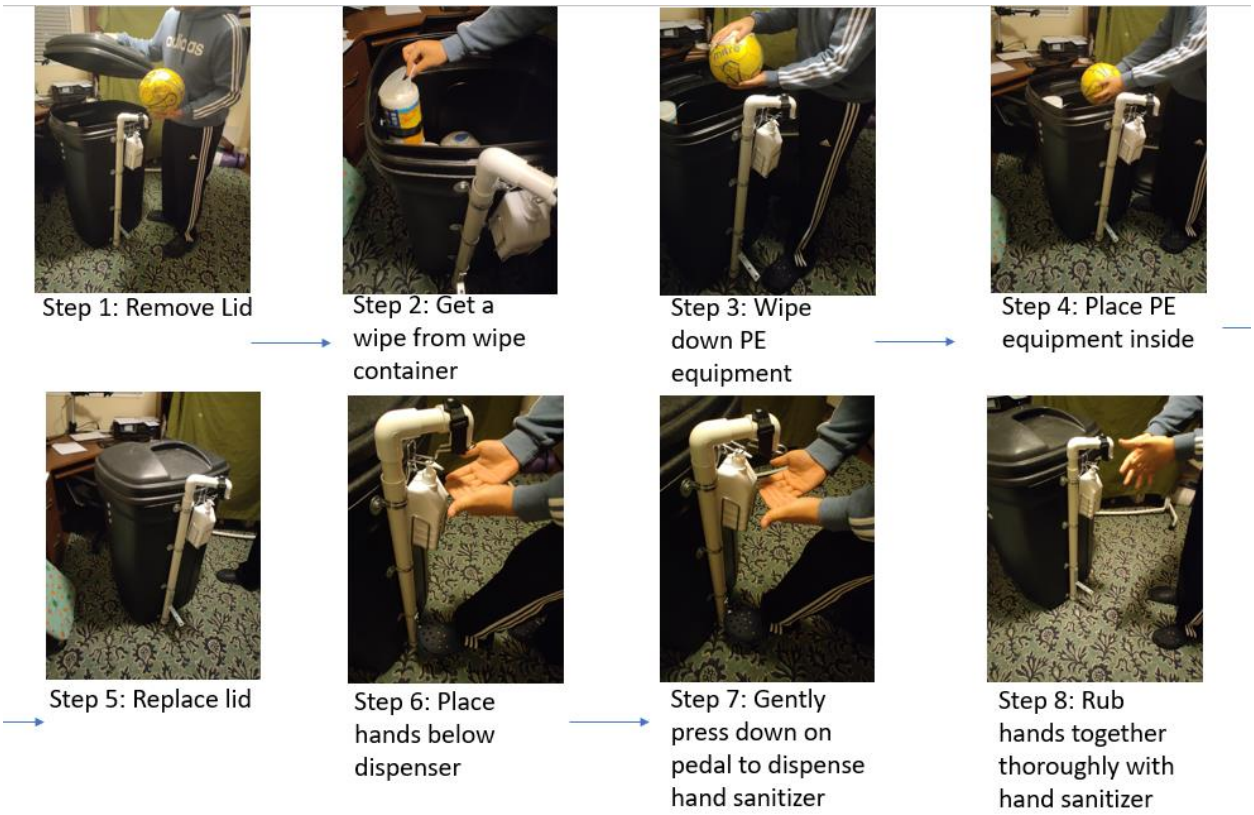

Figure 5-5 Step by step diagram for Trash Bot 1

5.5 Results/Performance

The final models for both Trash Bots are fully functional hand sanitizer dispensers capable of storing and cleaning PE equipment. Both are simple to use and maintain, durable enough for hundreds of uses a day each, as well as rain-proof. Both units will be deployed at Zane Middle School.

6 Appendices

A. References

Arduino. n.d. "Getting Started| Foundation > Introduction." *Arduino.cc*. Accessed Feb. 26, 2021. https://www.arduino.cc/en/guide/introduction

Arduino, n.d. *Wiring Diagram*. [image] Available at: <https://arduinogetstarted.com/tutorials/arduino-motion-sensor-servo-motor> [Accessed 27 February 2021].

Cyrus, R. (2020). "Adhesive Tape: A Full Technical Guide [2020 Edition]." *ECHOtape*, <https://www.echotape.com/blog/complete-technical-guide-adhesive-tape/> (May 2, 2021).

FDA. 2021. "Hand Sanitizers | COVID-19." *Coronavirus (COVID-19) | Drugs*. Accessed Feb. 26, 2021. https://www.fda.gov/drugs/coronavirus-covid-19-drugs/hand-sanitizers-covid-19#:~:text=If%20soap%20and%20water%20are,%2C%20to%20young%20children

Germ-X. n.d. "Germ-X Original 12 oz." *Germ-X.com.* Accessed Feb. 26, 2021. https://www.germx.com/product/germ-x-original-12-oz/

Goel, A. 2018. "Servo Motor: types and working principle explained." *Engineering.eckovation.com*. Accessed Feb. 26, 2021. https://engineering.eckovation.com/servo-motor-types-working-principle-explained/

Gojo/Purell. n.d. "Purell Hand Sanitizer Ingredients." *Gojo.com.* Accessed Feb. 26, 2021. https://www.gojo.com/en/Product-Catalog/Hand-Sanitizer/Ingredient-Transparency

Habitat for humanity, (n.d.), "what is upcycling" Accessed Feb 27, 2021, https://www.habitat.org/stories/what-is-upcycling

Hemera, I. (2018). “Benefits of Using Wood.” *Hyne Timber*, <https://www.hyne.com.au/why-timber/benefits-of-wood> (May 2, 2021).

Humboldt State Now (2015) “Engineering Students Showcase Partnership with Zane Middle School Students” Accessed Feb 26, 2021, http://now.humboldt.edu/news/engineering-students-showcase-partnership-with-zane-middle-school-students/.

Henneberry, B. n.d.. “Top Suppliers of Hand Sanitizer.” *Thomasnet*. Accessed Feb. 26, 2021. https://www.thomasnet.com/articles/top-suppliers/hand-sanitizer-suppliers-manufacturers/

Keenan, M., 2018. *A typical PIR sensor in operation*. [image] Available at: <https://www.avnet.com/wps/portal/abacus/resources/article/adapting-pir-sensor-technology-to-new-applications/> [Accessed 27 February 2021].

Li, I. 2019. “PIR Sensor: Overview, Applications and Projects” *Seedstudio.com*. Accessed Feb. 26, 2021. https://www.seeedstudio.com/blog/2019/08/03/pir-sensor-introduction-and-how-pir-motion-sensor-works-with-arduino-and-raspberry-pi/

Mayer, G. Roy, Butterworth, Tom, Nafpaktitis, Mary, and Sulzer-Azaroff, Beth, (1983), "PREVENTING SCHOOL VANDALISM AND IMPROVING DISCIPLINE: A THREE-YEAR STUDY.", Journal of Applied Behavior Analysis 16.4: 355-69. Web. , Accessed Feb 27, 2021

Mcdonell, G., and Sheard, D. 2012. *A Practical Guide To Decontamination In Healthcare.* John Wiley & Sons, Incorporated, West Sussex, UK.

Nevena, G. (2017). “Treated Wood Vs. Waterproofing.” *Hunker*, <https://www.hunker.com/12460882/treated-wood-vs-waterproofing> (May 2, 2021).

Rogers, K. 2020. “Hand sanitizer.” *Encyclopedia Britannica*. Accessed Feb. 26, 2021. https://www.britannica.com/topic/hand-sanitizer

Rosberg, J. (2015). “How Welding Works - The Basics of the Welding Process.” *Summit College*, <https://summitcollege.edu/how-welding-works/> (May 1, 2021).

Scales. (2005). "Developmental Assets and the Middle School Counselor.". Accessed Feb 27, 2021, www.jstor.org/stable/42732653

Skuld, J. (2019). "Plywood." *WoodSolutions*, <https://www.woodsolutions.com.au/wood-product-categories/plywood> (May 2, 2021).

Testrite, n.d. *HSG-FOTT-S - FOOT OPERATED HAND SANITIZER DISPENSER*. [image] Available at: <https://www.testrite.com/misc/products/index.php/?source=medical-supplies-and-healthy-retailing/foot-operated-hand-sanitizer-stands-/foot-operated-hand-sanitizer-stands-/foot-operated-hand-sanitizer-dispenser-stand/> [Accessed 27 February 2021].

Weather Spark, (2020), "Average Weather in Eureka" Accessed Feb 27, 2021, https://weatherspark.com/y/314/Average-Weather-in-Eureka-California-United-States-Year-Round#:~:text=In%20Eureka%2C%20the%20summers%20are,or%20above%2071°F.

Wichaidit, W., Naknual, S., Kleangkert, N., & Liabsuetrakul, T. 2020. "Installation of pedal-operated alcohol gel dispensers with behavioral nudges and changes in hand hygiene behaviors during the COVID-19 pandemic: A hospital-based quasi-experimental study." Journal of public health research, 9(4), 1863. https://doi.org/10.4081/jphr.2020.1863

Wum, S. (2014). "What Kind of Glue?" *American Chemical Society*, <https://www.acs.org/content/acs/en/education/outreach/celebrating-chemistry-editions/2020-ncw/glue-types.html> (May 2, 2021).

Zane MiddleSchool Staff (2021), " Winship and Zane Middle", Accessed Feb 27, 2021, https://docs.google.com/document/u/1/d/e/2PACX-1vQQoYb145415kxNTIkq9O87_vwZdi-gsrjfy9dU4Wg9bxivSrmZE0RohAzbKroprbamS90AuBK-3roB/pub.

6.1

B. Group Member's Timetables

Drake Pitchford						
All Time In Hours						
Date	Task	General Course Time		Project Time		Total Course Time
2/12/2021	meeting with client	0	0	2	2	2
2/18/2021	after lab brainstorm/memo	2	2	0	2	4
2/25/2021	reseach planing	0	2	0.5	2.5	4.5
2/25/2021	excel 2	0.5	2.5	0	2.5	5
2/25/2021	research	0	2.5	2	4.5	7
2/27/2021	Research day 2	0	2.5	8	12.5	15
2/28/2021	research final day	0	2.5	3	15.5	18
3/5/2021	meeting 2	0	2.5	0.5	16	18.5
3/11/2021	brainstorm sesh	2	4.5	0	16	20.5
3/13/2021	PRoto drawing	0	4.5	2	18	22.5
3/14/2021	proto write	0	4.5	1	19	23.5
3/18/2021	proto build lab	0	4.5	3	22	26.5
3/21/2021	proto photos	0	4.5	3	25	29.5
3/26/2021	trevor meeting	2	6.5	0	25	31.5
4/1/2021	group meeting	2	8.5	0	25	33.5
4/12/2021	memo	0	8.5	1	26	34.5
4/13/2021	memo	3	11.5	3	29	40.5
4/21/2021	slide prez	0	11.5	2	31	42.5
4/23/2021	practice prez	2	13.5	0	31	44.5
4/25/2021	Apropedia	2	15.5	0	31	46.5
4/25/2021	practice prez	0	15.5	0	31	46.5
4/26/2021	practice prez	0	15.5	0	31	46.5

Benjamin George						
All time in hours						
Date	Task Description	General Course Time		Project Time		Total Course Time
		Task	Total	Task	Total	
2/11/2021	Timesheet	0.3	0.3	0.0	0.0	0.3
2/11/2021	Trello	0.1	0.4		0.0	0.4
2/12/2021	Meeting with Client		0.4	0.5	0.5	0.9
2/12/2021	Brain Storm	0.5	0.9	0.4	0.9	1.8
2/18/2021	Brain Storm/memo		0.9	2.0	2.9	3.8
2/24/2021	Excel 2	0.5	1.4		2.9	4.3
2/25/2021	Meeting		1.4	0.5	3.4	4.8
2/26/2021	Research/memo		1.4	5.0	8.4	9.8
2/27/2021	Research/memo		1.4	8.0	16.4	17.8
2/28/2021	Memo/Sources	0.5	1.9	1.0	17.4	19.3
3/5/2021	Meeting		1.9	0.5	17.9	19.8
3/7/2021	CAD work	2.5	4.4		17.9	22.3
3/7/2021	Formatting with word	0.8	5.2		17.9	23.1
3/12/2021	Intial Design Sketches		5.2	0.5	18.4	23.6
3/12/2021	Interview #1		5.2	0.5	18.9	24.1
3/12/2021	Interview #2		5.2	0.5	19.4	24.6
3/12/2021	Sketching designs		5.2	0.5	19.9	25.1
3/14/2021	Memo Alternative sols		5.2	1.0	20.9	26.1
3/14/2021	Formatting with word	0.8	5.9		20.9	26.8
3/14/2021	Alternative solutions		5.9	3.0	23.9	29.8
3/19/2021	Prototpye		5.9	1.0	24.9	30.8
3/21/2021	Prototpye document		5.9	1.0	25.9	31.8
3/23/2021	Memo		5.9	1.5	27.4	33.3
3/26/2021	Client meet		5.9	0.5	27.9	33.8
3/28/2021	Prototyping		5.9	1.0	28.9	34.8
3/31/2021	Price finding		5.9	1.0	29.9	35.8
5/3/2021	Ethics	0.8	6.7		29.9	36.6
4/6/2021	Lowes Shopping		6.7	0.5	30.4	37.1
4/6/2021	Amazon shopping		6.7	0.5	30.9	37.6
4/10/2021	Shopping at home depot		6.7	1.0	31.9	38.6
4/10/2021	Construction		6.7	2.5	34.4	41.1
4/12/2021	memo		6.7	1.5	35.9	42.6
4/13/2021	memo		6.7	3.0	38.9	45.6
4/17/2021	Construction		6.7	3.0	41.9	48.6
4/18/2021	CAD drawing-memo		6.7	2.0	43.9	50.6
4/19/2021	CAD 3	2.0	8.7		43.9	52.6
4/20/2021	CAD 3	0.5	9.2		43.9	53.1
4/21/2021	presentation	2.0	11.2		43.9	55.1
4/22/2021	presentation	2.0	13.2		43.9	57.1
4/25/2021	construction	2.0	15.2		43.9	59.1
4/25/2021	Apropedia		15.2	3.0	46.9	62.1
4/28/2021	Presentation	3.0	18.2		46.9	65.1
4/28/2021	Stencil Making	2.5	20.7		46.9	67.6
4/29/2021	Presentation	3.0	23.7		46.9	70.6
5/2/2021	Memo	2.0	25.7		46.9	72.6

1	Date	Task Description	General Course Time (hrs)		Project Time (Hrs)		Total Course Time (Hrs)
2			Task	Total	Task	Total	
3	2/7	Appropedia User Page	0.5	0.5	0	0	0.5
4	2/7	Team Maker	0.25	0.75	0	0	0.75
5	2/9	Class Brainstorm Session	0	0.75	1.5	1.5	2.25
6	2/11	Class Brainstorm Session	1	1.75	1	2.5	4.25
7	2/11	Team Contract	0	1.75	0.4	2.9	4.65
8	2/14	Trello Team Maker	0	1.75	1	3.9	5.65
9	2/14	Time Sheet	0.1	1.85	0	3.9	5.75
10	2/18	Memo	0	1.85	0.5	4.4	6.25
11	2/27	Memo	0	1.85	5	9.4	11.25
12	2/28	Memo	0	0	8	17.4	17.4
13	3/5	Client meeting	0	1.85	0.5	17.9	19.75
14	3/7	CAD	1	2.85	0	17.9	20.75
15	3/7	Formatting with Word	1	3.85	0	17.9	21.75
16	3/12	Interviews	0	3.85	0.45	18.35	22.2
17	3/24	Sketching designs	0	3.85	1.2	19.55	23.4
18	3/20	Memo Work	0	3.85	1.5	21.05	24.9
19	3/26	Client meeting	0	3.85	0.5	21.55	25.4
20	3/28	Prototyping	0	3.85	1.5	23.05	26.9
21	3/29	Brainstorm	0	3.85	1.2	24.25	28.1
22	4/1	Brainstorm	0	3.85	1.4	25.65	29.5
23	4/3	Ethics	0	3.85	0.75	26.4	30.25
24	4/4	CAD	0	3.85	0.75	27.15	31
25	4/10	Shopping	0	3.85	0.5	27.65	31.5
26	4/10	Shopping	0	3.85	1	28.65	32.5
27	4/10	Building	0	3.85	1.5	30.15	34
28	4/12	Shopping	0	3.85	0.75	30.9	34.75
29	4/12	Building	0	3.85	4	34.9	38.75
30	4/25	Shopping	0	3.85	0.75	35.65	39.5
31	4/21	Practice Presentation	0	3.85	2	37.65	41.5
32	4/21	Practice Presentation	0	3.85	2	39.65	43.5
33	4/26	Building	0	3.85	3.75	43.4	47.25
34	4/26	Shopping	0	3.85	0.8	44.2	48.05
35	4/29	Final Presentation	0	3.85	0.6	44.8	48.65
36	4/30	Appropedia	0	3.85	4	48.8	52.65

C. Brainstorm

Bases

Container bottom weight
Trash can dispenser
Plastic bin PVC hole
Dolly
Storage box counterweight

Wheel

Trashcan
Casters
Back-mounted wheels

Trigger

Direct dispenser
Upside down pulley
Magnets
arduino

Core

Adjustable holder
Velcro holds
Pegboard dispenser
Adjustable platform

Final Names

Ben

Trash Bot

Drake

BucketBottom-plastic bin at the base pvc tube running through, trashcan wheels,
UpPush-Upside down dispensing, with a peg board for adjustability ,caster cross base

Figure 6-1 Brainstorming Notes referenced alternative solutions section.